[INDUCTION COOKTOP – 88131K-MN / 88101-K]

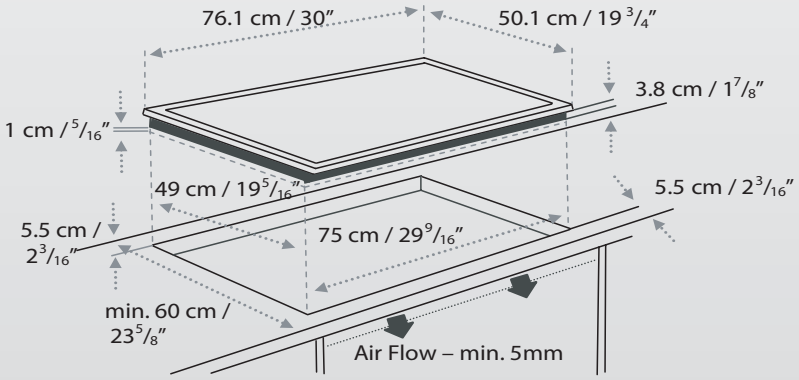

A minimum gap of 20mm must be left between bottom of cooktop and top of oven

ELECTRICAL REQUIREMENT:
208/230 Volt/60hZ
40 AMP / 7500W

Unit Dims: 76.1cm W x 50.1cm D / 30" W X 19 3/4" D

Cut-outs: 75cm W x 49cm D / 29 9/16" W x 19 5/16" D