[SINGLE OVEN – B5742-5-M]

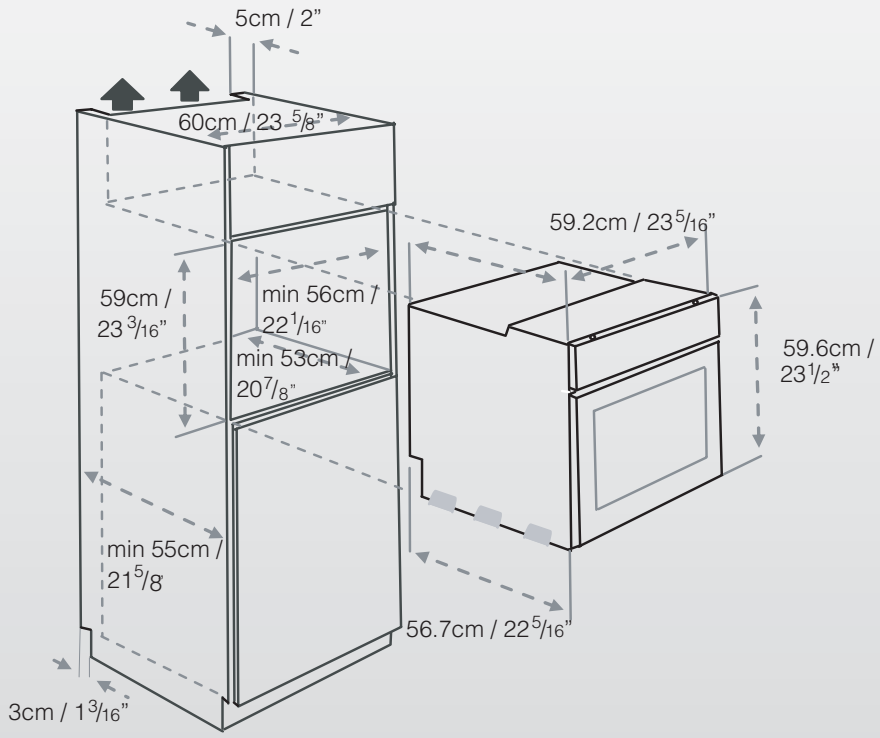

ELECTRICAL REQUIREMENT:
208/230 Volt 60 hZ
20 AMP / 3000w

Unit Dims: 59.6cm H x 59.2cm W x 56.7cm D
23 1/2” H x 23 5/16” W x 22 5/16” D

Cut-outs: 59cm H x 56cm W x 55cm D
23 1/4” H x 22 1/16” W x 21 5/8” D

* When built under counter there must be a minimum gap of 5cm / 2” cut out of the shelf behind the oven to allow free air flow

** When mounted in a tall or demi-tall cabinet there must be a minimum gap of 5cm / 2” cut out of the shelf and behind upper cupboard to allow free air flow